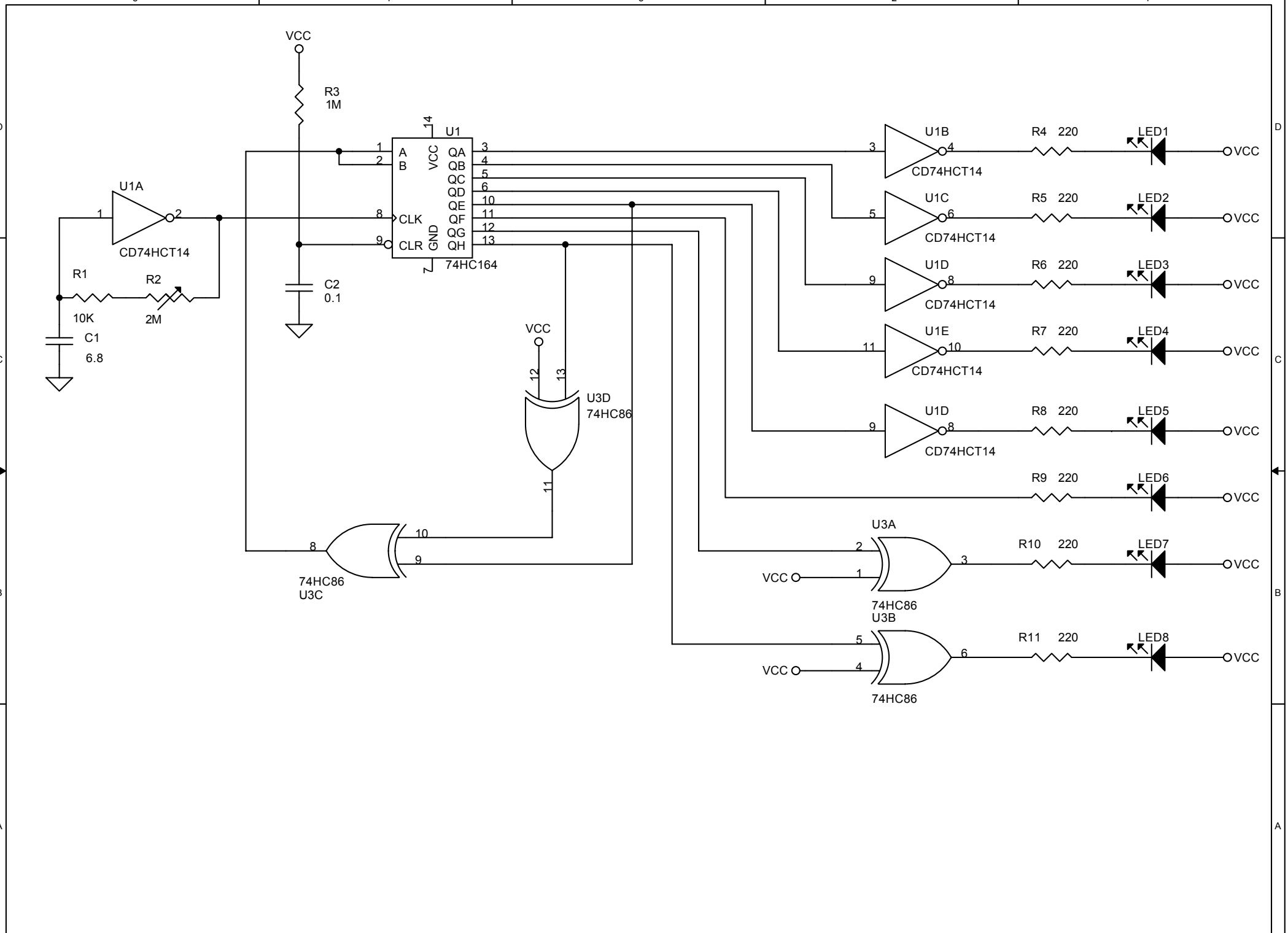
VCC
R3
1M
U1
14
A
B
VCC
QA
QB
QC
QD
QE
QF
QG
QH
CLK
CLR
GND
7
74HC164
U1A
CD74HCT14
R1
10K
R2
2M
C1
6.8
C2
0.1
U3D
74HC86
U3C
74HC86
U3A
74HC86
U3B
74HC86
U1B
U1C
U1D
U1E
U1D
CD74HCT14
R4 220
R5 220
R6 220
R7 220
R8 220
R9 220
R10 220
R11 220
LED1
LED2
LED3
LED4
LED5
LED6
LED7
LED8