DWG. NO.	SH 1	REV.

REVISION HISTORY

REV	DESCRIPTION	DATE	APPROVED

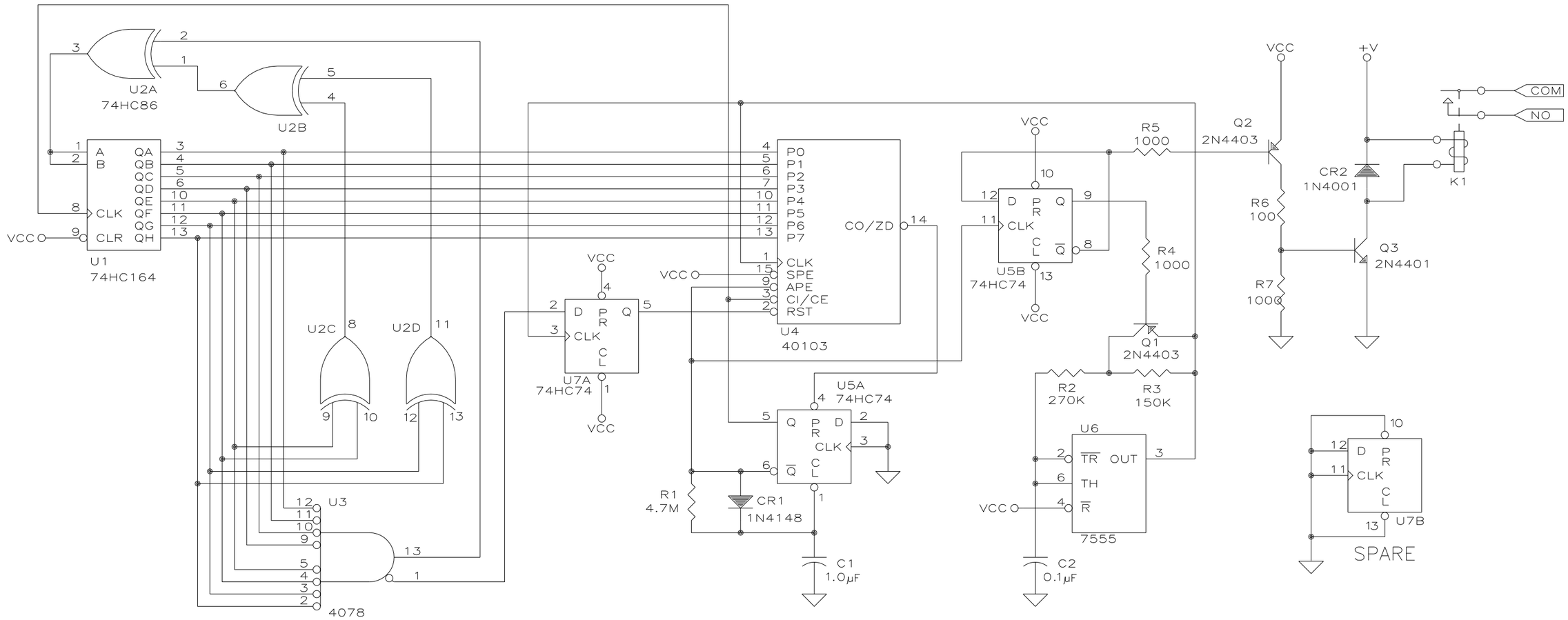

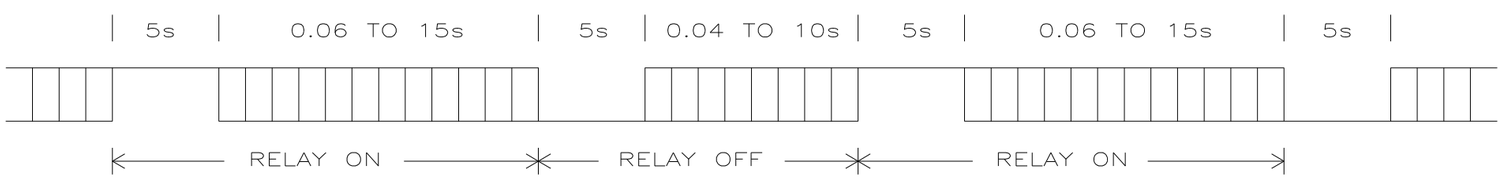

Austin Instruments, Inc.
Austin, Republic of Texas

PSEUDO–RANDOM TIMER

DWG SED 20050606