DWG. NO.	SH 1	REV.

REVISION HISTORY

REV	DESCRIPTION	DATE	APPROVED
A	FIXED TYPOS	21JAN06	

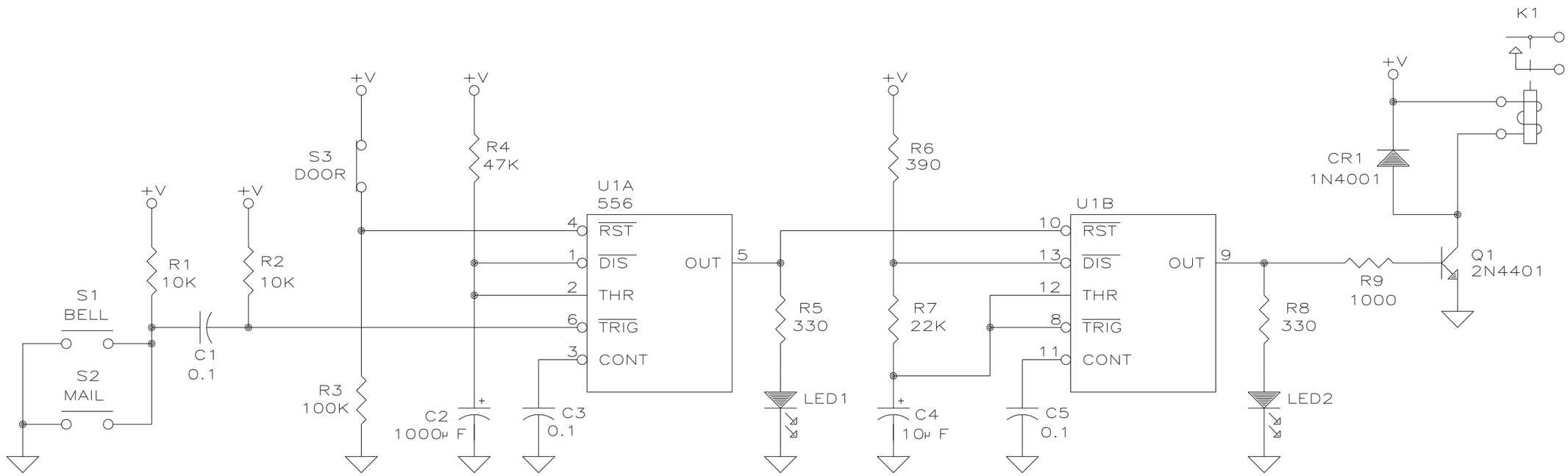

ITEM	QTY REQD	CAGE CODE	PART OR IDENTIFYING NO.	NOMENCLATURE OR DESCRIPTION	MATERIAL SPECIFICATION

PARTS LIST

UNLESS OTHERWISE SPECIFIED DIMENSIONS ARE IN INCHES
TOLERANCES ARE:
FRACTIONS ± 1/32 DECIMALS .XX ± 0.005 .XXX ± 0.001 ANGLES ± 1°

MATERIAL

FINISH

DO NOT SCALE DRAWING

CONTRACT NO.

APPROVALS	DATE
DRAWN	
CHECKED	
ISSUED J FIELDS	21JAN06

Austin Instruments, Inc.
Austin, Republic of Texas

ALARM CIRCUIT

SIZE	CAGE CODE	DWG. NO.	REV.
B	ØNM76	SED20060121	A

SCALE NTS SHEET 1 OF 1

NEXT ASSY	USED ON

APPLICATION