DWG. NO. SED20051111 SH 1 REV.

REVISION HISTORY			
REV	DESCRIPTION	DATE	APPROVED

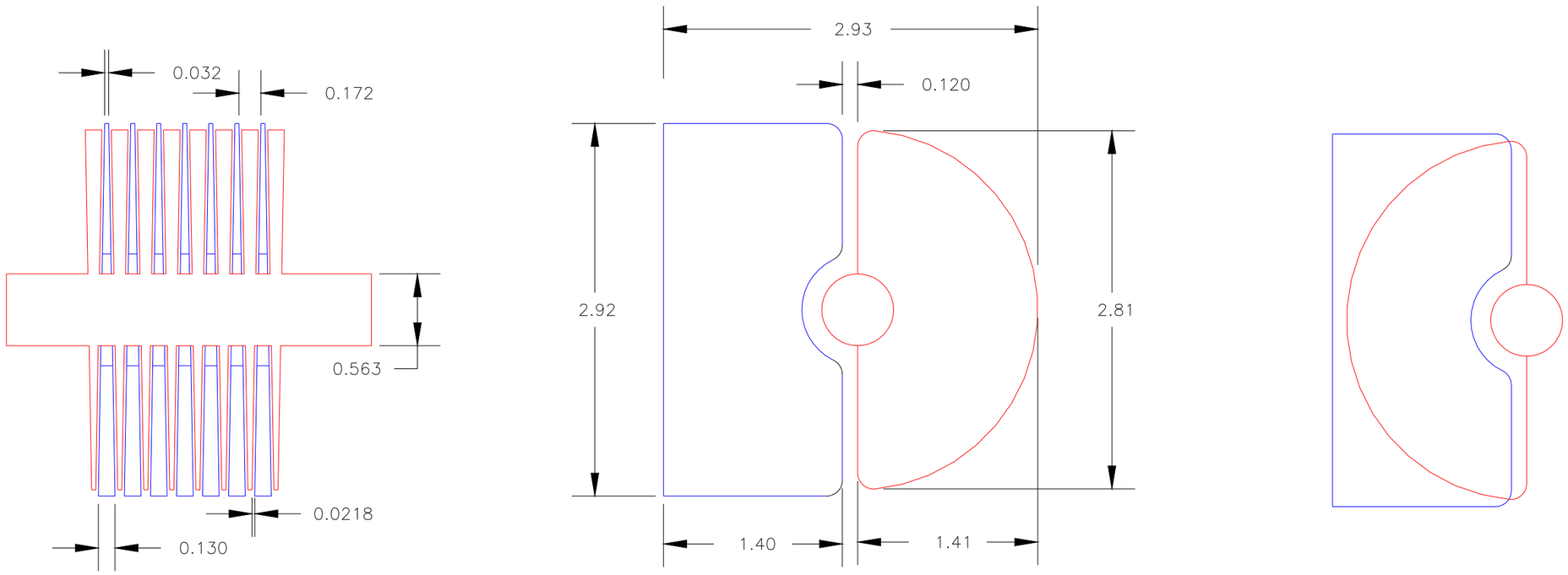

ITEM	QTY REQD	CAGE CODE	PART OR IDENTIFYING NO.	NOMENCLATURE OR DESCRIPTION	MATERIAL SPECIFICATION

PARTS LIST

UNLESS OTHERWISE SPECIFIED DIMENSIONS ARE IN INCHES
TOLERANCES ARE:

FRACTIONS	DECIMALS	ANGLES
± 1/32	.XX ± 0.005 .XXX ± 0.001	± 1°

MATERIAL

FINISH

DO NOT SCALE DRAWING

CONTRACT NO.

APPROVALS	DATE
DRAWN	
CHECKED	
ISSUED J FIELDS	11OCT05

Austin Instruments, Inc.
Austin, Republic of Texas

CARDWELL CAPACITOR DIMENSIONS

SIZE	CAGE CODE	DWG. NO.	REV.
B	ØNM76	SED20051111	

SCALE NTS

SHEET 1 OF 1

NEXT ASSY	USED ON

APPLICATION