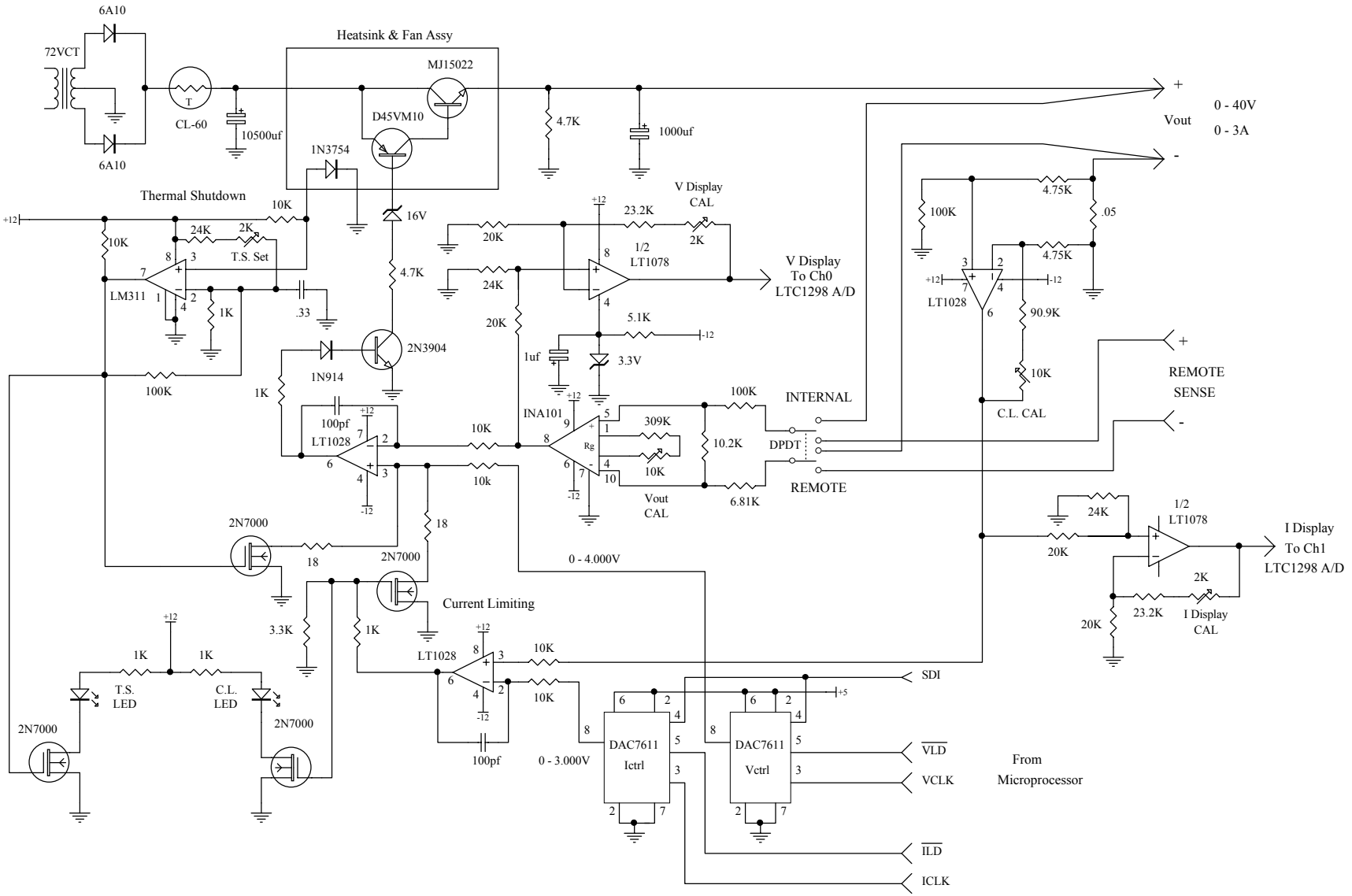
6A10
72VCT
6A10
CL-60
10500uf
Heatsink & Fan Assy
MJ15022
D45VM10
1N3754
4.7K
1000uf
+
Vout
-
0 - 40V
0 - 3A
Thermal Shutdown
+12
10K
24K
2K
T.S. Set
LM311
1K
.33
16V
4.7K
2N3904
1N914
100K
1K
100pf
LT1028
10K
10k
18
2N7000
18
2N7000
0 - 4.000V
Current Limiting
3.3K
1K
LT1028
10K
10K
100pf
0 - 3.000V
1K
1K
T.S.
LED
C.L.
LED
2N7000
2N7000
20K
24K
20K
23.2K
V Display
CAL
2K
1/2
LT1078
V Display
To Ch0
LTC1298 A/D
5.1K
-12
1uf
3.3V
INA101
Rg
309K
10K
Vout
CAL
100K
10.2K
6.81K
INTERNAL
DPDT
REMOTE
DAC7611
Ictrl
DAC7611
Vctrl
+5
SDI
VLD
VCLK
ILD
ICLK
From
Microprocessor
100K
4.75K
.05
4.75K
LT1028
90.9K
10K
C.L. CAL
REMOTE
SENSE
24K
20K
1/2
LT1078
I Display
To Ch1
LTC1298 A/D
2K
23.2K
I Display
CAL
20K