DWG. NO.	SH 1	REV.

REVISION HISTORY

REV	DESCRIPTION	DATE	APPROVED
A	CR5 REVERSED	07JUL05	

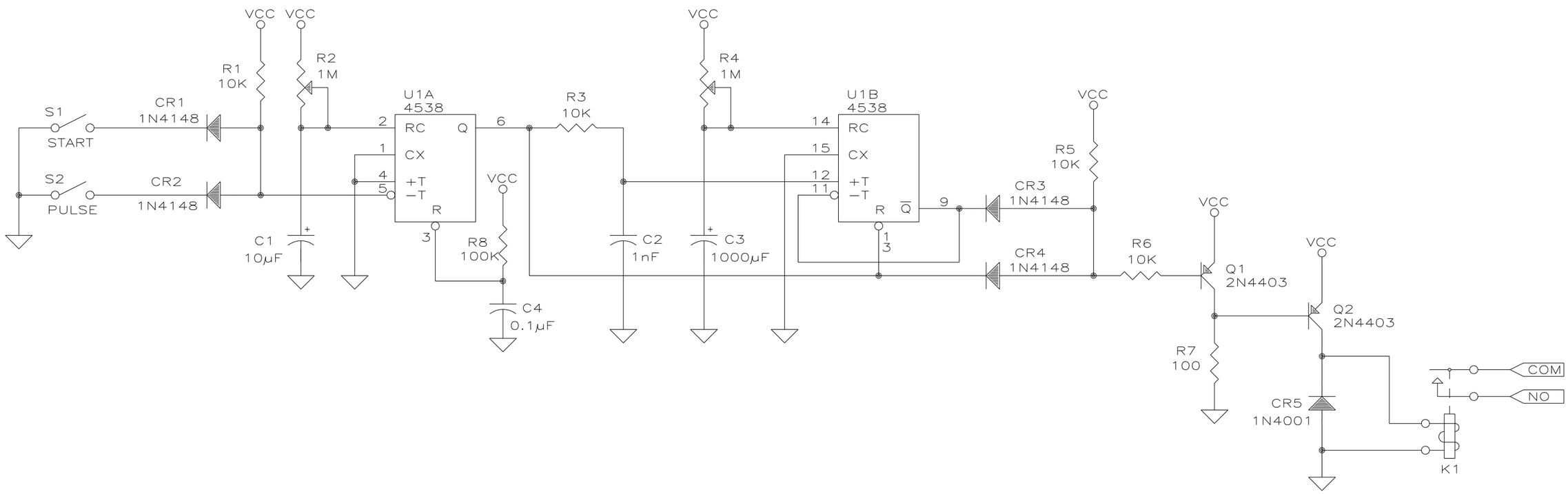

ITEM	QTY REQD	CAGE CODE	PART OR IDENTIFYING NO.	NOMENCLATURE OR DESCRIPTION	MATERIAL SPECIFICATION

PARTS LIST

UNLESS OTHERWISE SPECIFIED DIMENSIONS ARE IN INCHES
TOLERANCES ARE:

FRACTIONS	DECIMALS	ANGLES
± 1/32	.XX ± 0.005 .XXX ± 0.001	± 1°

MATERIAL

FINISH

NEXT ASSY	USED ON

APPLICATION

DO NOT SCALE DRAWING

CONTRACT NO.

APPROVALS	DATE
DRAWN	
CHECKED	
ISSUED J FIELDS	12JUN05

Austin Instruments, Inc.
Austin, Republic of Texas

BICYCLE RIDE TIMER

SIZE	CAGE CODE	DWG. NO.	REV.
B	ØNM76	SED20050712	A

SCALE NTS

SHEET 1 OF 1